Hi-MO X6 Max Artist

LR7-54HTB

450~470M

- Suitable for Distribution Market
- Pure black for extreme elegance
- Better energy generation performance
- Better product warranty, better service

25 25-year Warranty for Materials and Processing

25 25-year Warranty for Extra Linear Power Output

Complete System and Product Certifications

IEC 61215, IEC 61730

ISO9001:2015: ISO Quality Management System

ISO14001: 2015: ISO Environment Management System

ISO45001: 2018: Occupational Health and Safety

IEC62941: Guideline for module design qualification and type approval

LONGi

Hi-MO X6 Max Artist

LR7-54HTB 450~470M

23.0%	0~3%	<1%	0.40%
MAX MODULE EFFICIENCY	POWER TOLERANCE	FIRST YEAR POWER DEGRADATION	YEAR 2-25 POWER DEGRADATION

Additional Value

25-Year Power Warranty

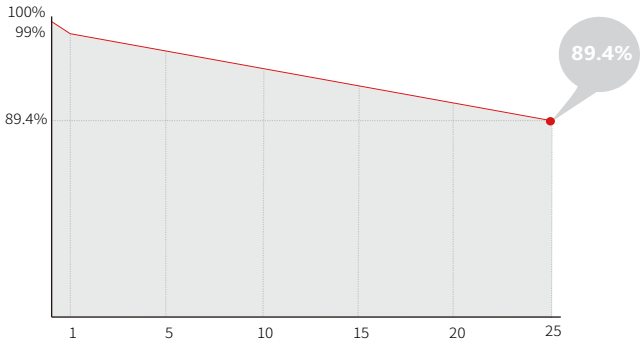

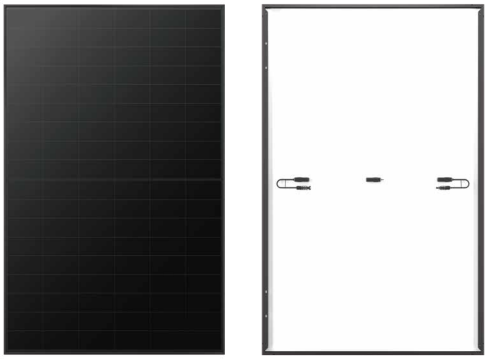

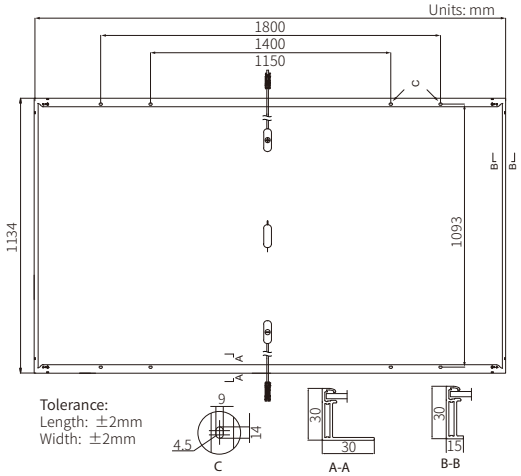

Mechanical Parameters

Cell Orientation	108 (6×18)
Junction Box	IP68
Output Cable	4mm², ±1200mm length can be customized
Glass	Single glass, 3.2mm coated tempered glass
Frame	Anodized aluminum alloy frame
Weight	21.6kg
Dimension	1800×1134×30mm
Packaging	36pcs per pallet / 216pcs per 20' GP / 864pcs per 40' HC

Electrical Characteristics

STC : AM1.5 1000W/m² 25°C NOCT : AM1.5 800W/m² 20°C 1m/s Test uncertainty for Pmax: ±3%

Module Type	LR7-54HTB-450M		LR7-54HTB-455M		LR7-54HTB-460M		LR7-54HTB-465M		LR7-54HTB-470M	
Testing Condition	STC	NOCT	STC	NOCT	STC	NOCT	STC	NOCT	STC	NOCT
Maximum Power (Pmax/W)	450	336	455	340	460	344	465	347	470	351
Open Circuit Voltage (Voc/V)	39.11	36.72	39.31	36.91	39.51	37.10	39.71	37.29	39.91	37.47
Short Circuit Current (Isc/A)	14.63	11.81	14.70	11.87	14.77	11.93	14.83	11.98	14.93	12.06
Voltage at Maximum Power (Vmp/V)	32.94	30.06	33.14	30.24	33.34	30.42	33.54	30.60	33.74	30.79
Current at Maximum Power (Imp/A)	13.67	11.19	13.73	11.25	13.80	11.31	13.87	11.36	13.94	11.41
Module Efficiency(%)	22.1%		22.3%		22.5%		22.8%		23.0%	

Operating Parameters

Operational Temperature	-40°C ~ +85°C
Power Output Tolerance	0 ~ 3%
Maximum System Voltage	DC1500V (IEC)
Maximum Series Fuse Rating	25A
Nominal Operating Cell Temperature	45±2°C
Protection Class	Class II
Fire Rating	IEC Class C

Mechanical Loading

Front Side Maximum Static Loading	5400Pa
Rear Side Maximum Static Loading	2400Pa
Hailstone Test	25mm Hailstone at the speed of 23m/s

Temperature Ratings (STC)

Temperature Coefficient of Isc	+0.050%/°C
Temperature Coefficient of Voc	-0.230%/°C
Temperature Coefficient of Pmax	-0.280%/°C

LONGi

Specifications included in this datasheet are subject to change without notice. LONGi reserves the right of final interpretation. (20240715 V2) DG